REV.	ECN NO	LOCATIONS	DESCRIPTION	DATE	REVISER	APPD

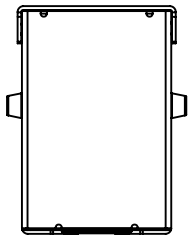

DIM A	DIM B
12.90	15.30
12.60	16.10
12.40	

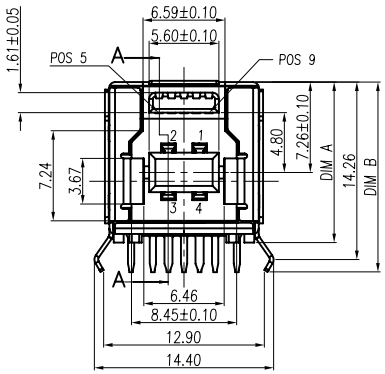

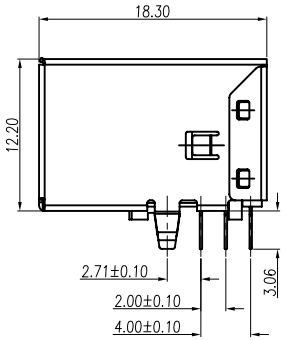

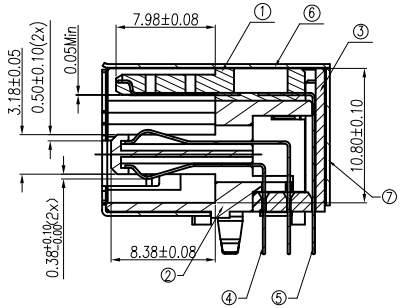

SECTION A-A

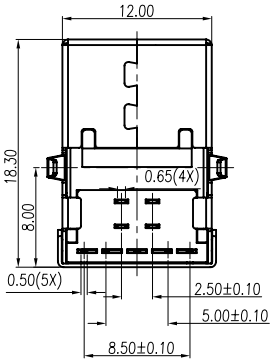

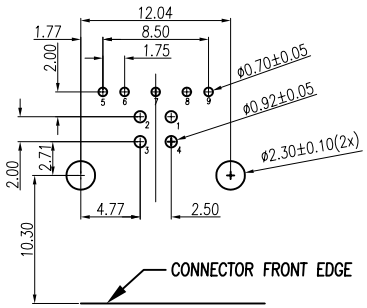

RECOMMANDED PCB LAYOUT

Note:

Specification:

1. Rated voltage and current: 1A Max.
2. Dielectric withstanding voltage: 30V(ac) for 1 minute.
3. Contact resistance:Before life test 30m ohm Max.
   After life test 50m ohm max
4. Insulation resistance: 100M ohm Min at DC 500V.
5. Insertion force: 35 Newtons Max.
6. Extraction force: 10 Newtons Min.
7. Solderability:Terminal shall be immersed in flux before text,Then dip in molten solder for 5±0.5 sec. At 245±5°C
8. Temperature range:-55°C~+85°C

No.	Name	Q'ty	Material	Remarks & Thickness	Finish
7	Back Shell	1	SPCC	T=0.20mm	Cu:20"min.80u"~120u"Nickel Plated
6	Shell	1	Brass	T=0.30mm	Cu:20"min.80u"~120u"Nickel Plated
5	Contact 2	5	Brass	T=0.20mm	Contact area: 30u" Gold Plate over 40u"Nickel min. Solder area:80~120u" Tin Plated over 40u" Nickel min.(or All Gold Plated)
4	Contact 1	4	Phosphor bronze	T=0.20mm	Contact area:30u" Gold Plated over 40u"Nickel min. Solder area:80~120u" Tin Plated over 40u" Nickel min.(or All Gold Plated)
3	Hood	1	LCP	UL 94-V0	Blue
2	Housing 2	1	LCP	UL 94-V0	Blue
1	Housing 1	1	LCP	UL 94-V0	Blue

PRAT NO:		MATERIAL:	HSI-CHIN ELECTRONICS CO.,LTD
MODEL NO:		FINSH:	
UNIT: mm	SAZE: A4	COLOR:	PART NAME: USB-B(F)90度DIP3.0版
TOLERANCE UNSPECIFIED .X ±0.30 .XX ±0.20 .XXX ±0.10 ANG ±1°		DR: 劉志希 10/04/09	
		CHK: James 10/04/09	DWG NO: S/A-585 REV. A0
		APP: Kent 10/04/09	SCALE: 1:1 SHEET: 1 of 1

ROHS Compliant