REV.	ECN NO	LOCATIONS	DESCRIPTION	DATE	REVISER	APPD

Top View

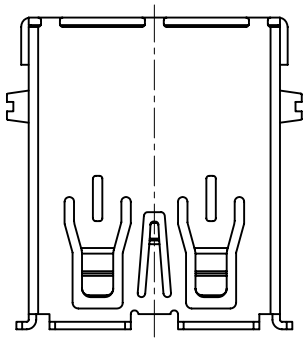

Front View

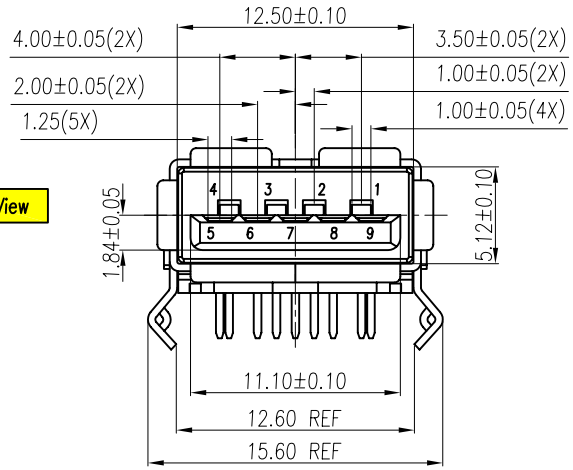

Side View

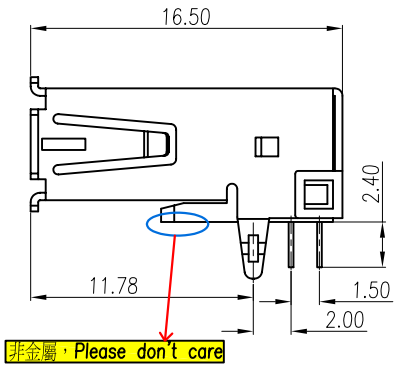

Bottom View

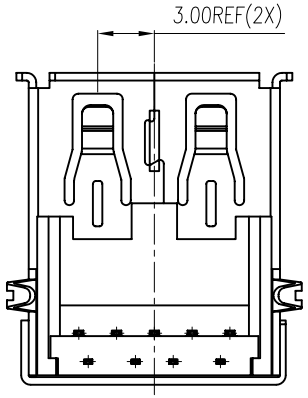

Top View

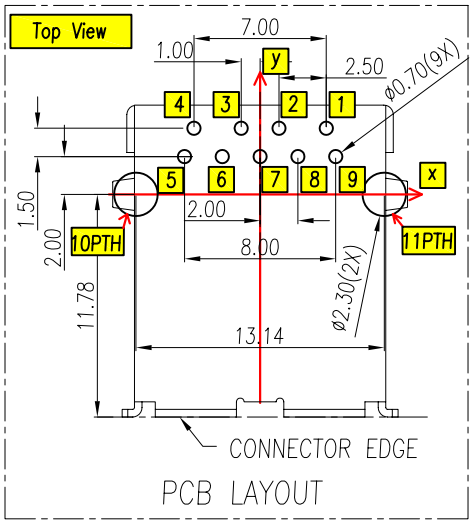

PCB LAYOUT

Note:

Specification:

1. Rated voltage and current: 1A Max.
2. Dielectric withstanding voltage: 30V(ac) for 1 minute.
3. Contact resistance:Before life test 30m ohm Max.
   After life test 50m ohm max
4. Insulation resistance: 100M ohm Min at DC 500V.
5. Insertion force: 35 Newtons Max.
6. Extraction force: 10 Newtons Min.
7. Solderability:Terminal shall be immersed in flux before text,Then dip in molten solder for 5±0.5 sec. At 245±5°C
8. Temperature range:−55°C~+85°C

No.	Name	Q'ty	Material	Remarks & Thickness	Finish
5	Shell	1	Brass	T=0.40mm	Cu:40"min.80u"~120u"Nickel Plated
4	Contact 2	5	Brass	T=0.20mm	Contact area:30u" Gold Plated over 40u"Nickel min. Solder area:80~120u" Tin Plated over 40u" Nickel min.(or All Gold Plated)
3	Contact 1	4	Phosphor bronze	T=0.20mm	Contact area:30u" Gold Plated over 40u"Nickel min. Solder area:80~120u" Tin Plated over 40u" Nickel min.(or All Gold Plated)
2	Hood	1	PBT	UL 94-V0	Blue
1	Housing	1	PBT	UL 94-V0	Blue

PRAT NO:		MATERIAL:	HSI-CHIN ELECTRONICS CO.,LTD
MODEL NO:		FINSH:	
UNIT: mm	SAZE: A4	COLOR:	PART NAME: USB-A(F) 90° DIP(3.0版)(板下型)端子腳長2.4
TOLERANCE UNSPECIFIED .X ±0.30 .XX ±0.20 .XXX ±0.10 ANG ±1°		DR: 趙承寶 '10/07/06	
		CHK: James '10/07/06	DWG NO: S/A-581-01 REV. A0
		APP: Kent '10/07/06	SCALE: 1:1 SHEET: 1 of 1

ROHS Compliant