REV.	ECN NO	LOCATIONS	DESCRIPTION	DATE	REVISER	APPD

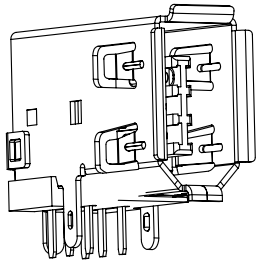

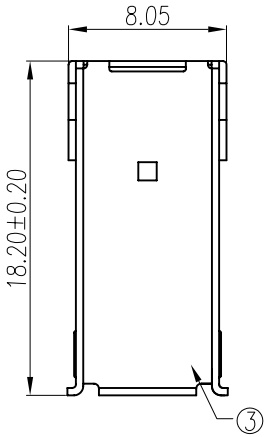

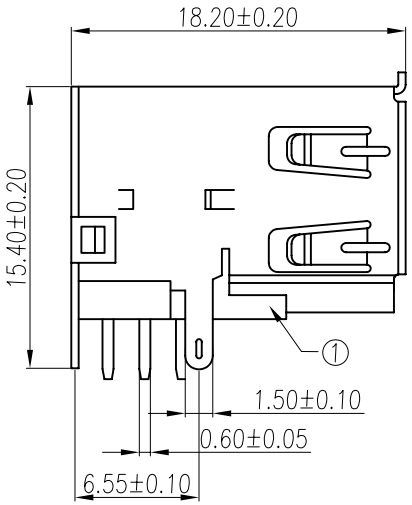

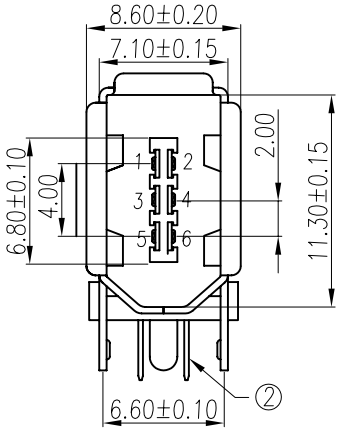

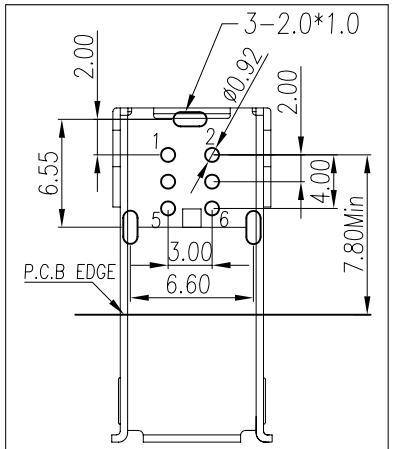

P.C.B. LAYOUT

****

Note:

Specification:

1. Current rating: 1A Max.
2. Dielectric withstanding voltage: 30V(ac) for 1 minute.
3. Contact resistance: 30 mΩ Max.
4. Insulation resistance: 1000 MΩ Min at DC 500V.
5. Insertion force: 4.0 Kgf Max.
6. Extraction force: 1.0 Kgf Min.
7. Temperature range: −55°C~+105°C

No.	Name	Q'ty	Material	Remarks & Thickness	Finish
3	Shell	1	Brass	T=0.40mm	80~120u"Nickel/Tin Plated
2	Contact	6	Brass	T=0.25mm	Contact area:0.8~1.2u"Gold Plated over 40u"Nickel min. Solder area:80~120u"Tin Plated over 40u"Nickel min.
1	Housing	1	PA66	UL 94-V0	Black

PART NO:		MATERIAL:	HSI-CHIN ELECTRONICS CO.,LTD
MODEL NO:		FINSH:	
UNIT: mm	SIZE: A4	COLOR:	PART NAME: IEEE 1394-6PIN(F)側向90°
TOLERANCE UNSPECIFIED .x ±0.30 .xx ±0.20 .xxx ±0.10 ANG. ±1°		DR: 段林麗 '06/03/02 CHK: Kevin '06/03/02 APP: Kent '06/03/02	DWG NO: S/A-493 REV: A0 SCALE: 1:1 SHEET: 1 of 1

ROHS Compliant